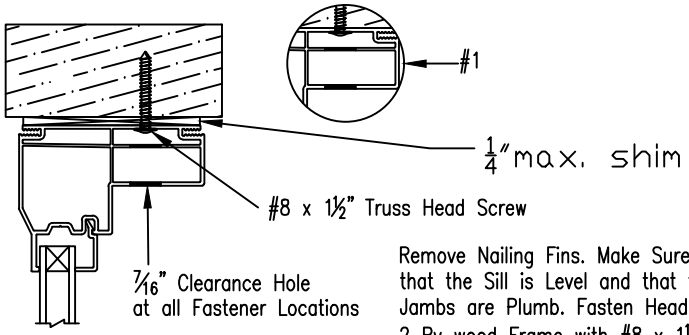

Remove Nailing Fins. Make Sure that the Sill is Level and that the Jambs are Plumb. Fasten Head to 2 By wood Frame with #8 x 1½" Truss Head Screws 5" from Each Corner and midpoint with 20½"(Max) Between Fasteners. Remove Sash and Balances. Fasten Jambs to 2 by wood Frame with #8 x 1½" Truss Head Screw 5" from Each Corner with 20½" (Max) Between Fasteners. No Screws Through Sill. Use 7/16" Clearance Hole at Center Line of Sash Pocket of at Each Fastener Location. (2) Walls at Head, (1) Wall at Jambs. "See Drawing #1 & #2"

Note: Fasteners must have a minimum of 1" embedment into framing and have a min. of 1" from edge of rough opening.

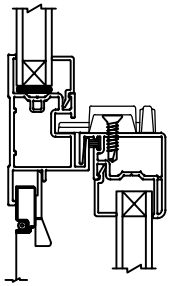

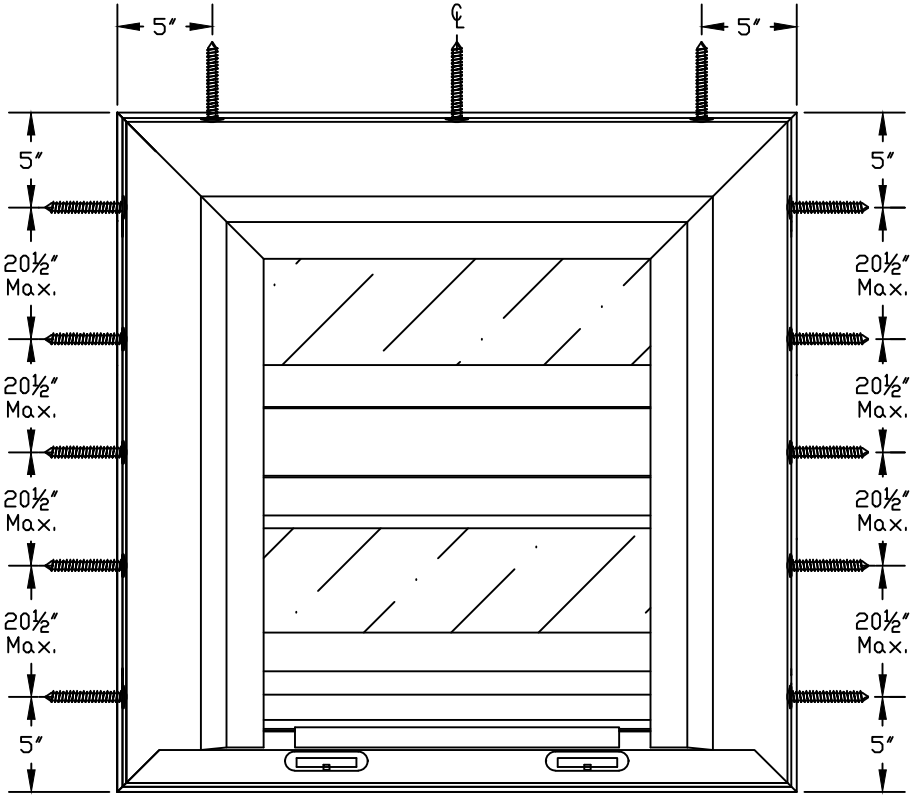

MAXIMUM SIZE: 48"WIDTH X 72"HEIGHT DP +/- 45
44"WIDTH X 72"HEIGHT DP +/- 50

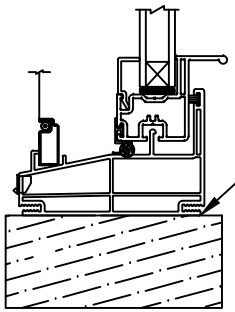

Apply Continuous Bead of Silicone Between Frame and 2 by Wood around both sides of window. Full Perimeter.

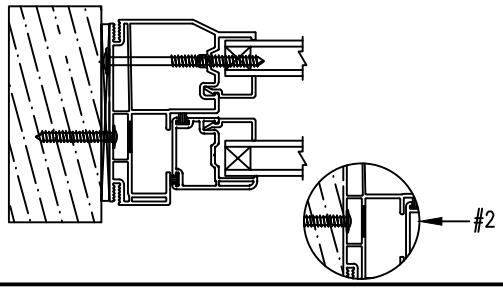

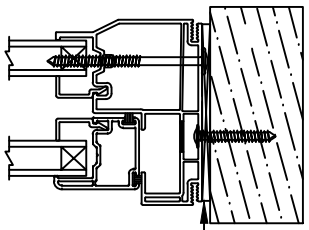

¼" max. shim (2)

Krestmark Ind. L.P.
3950 Bastille Rd. Suite 100
Dallas, Texas 75212

220 S.H Series Replacement Installation Instructions